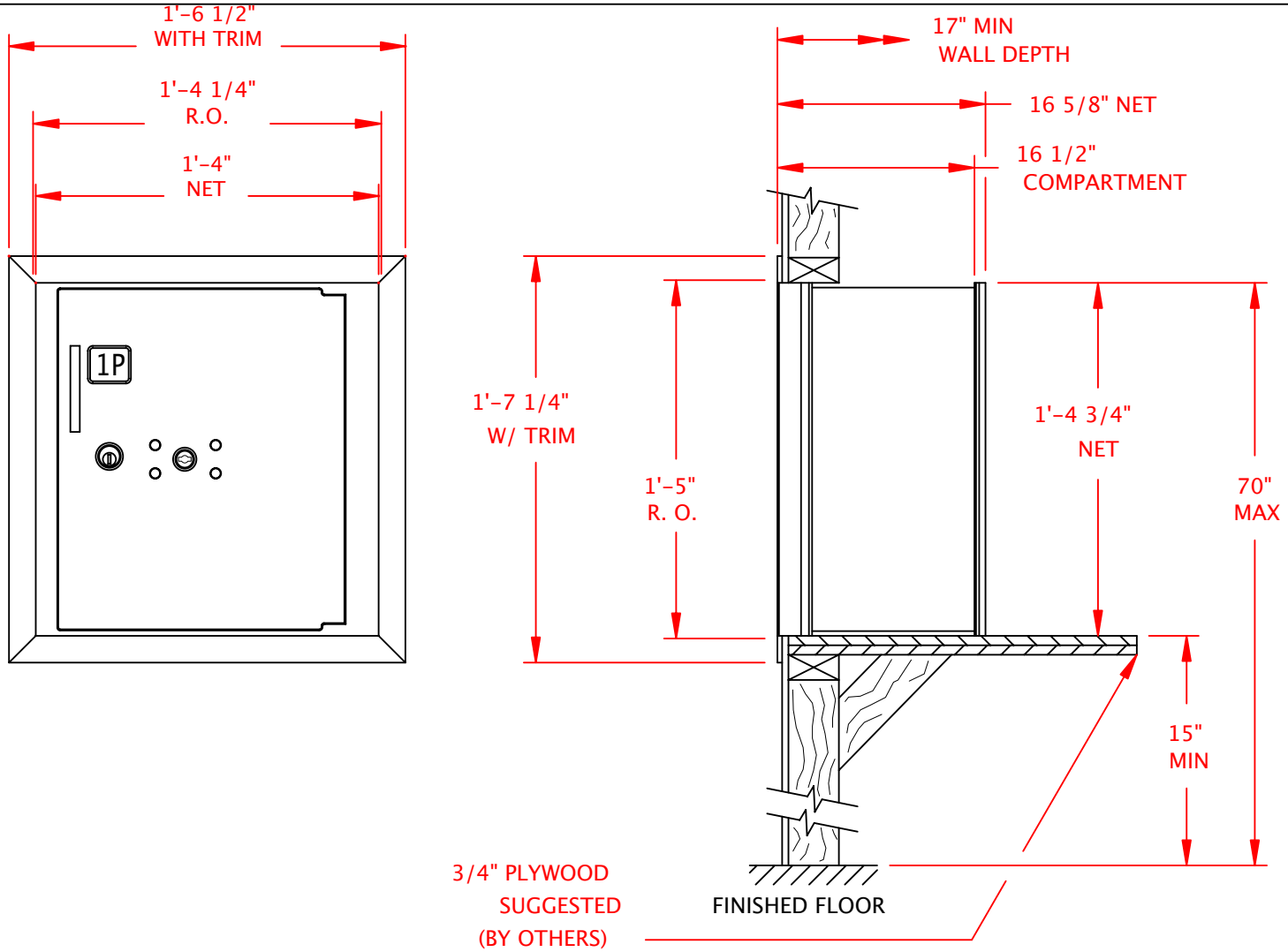

POSTAL PRODUCTS UNLIMITED, INC.™
A Division of American Postal Manufacturing, Inc.
Phone. 1-800-229-4500
500 W. Oklahoma Ave.
Milwaukee, WI 53207-2649

Product: 4C-X1 Horizontal - N1027867			
Distribution: USPS Approved		Finish: Powder Coated	
Mounting: Recessed		Total Mailboxes: One Parcel Locker	
Date: 11/21/05	Scale: 5/32"=1"	Drawn By: CDO	Checked By: AJK